Driver Specification Sheet

Peerless by TYMPHANY

Model No: NE25VTS-04

Product Line: Tymphany

Rev: 2

Last Update: 2015-10-15 02:52:01

Product Description

The 25 mm 4 ohm member of the NE family has leading-edge transducer technology packaged in a cutting edge, stylistic design. The tweeters in this family feature finite element analysis designed Neodymium-Iron-Boron magnet (NdFeB) motors, with copper caps for extended frequency response and reduced distortion. The aluminium rear chambers offer extended low frequency performance, while doubling as heat sinking. The butterfly supporting the tweeter diaphragm is made of a high temperature plastic, consistent with the products high temperature performance rating, and features supporting terminals. The dome material in this design is silk, and the design has been optimized for sound quality and clarity. Rounding out the design is an aluminium face plate and plastic grille, which offers protection for the tweeter diaphragm. \\\\\\\\r\\\\\\\\n

Mechanical Drawing

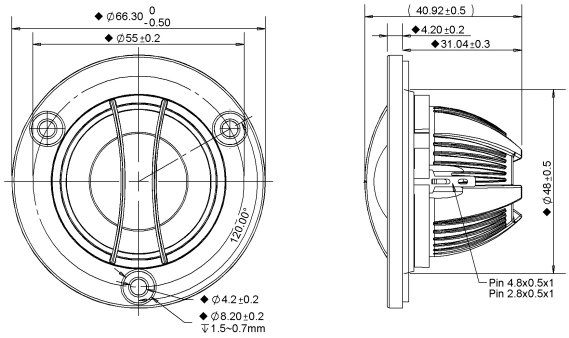

Specifications

DC Resistance	Revc	Ohms	3.15	5.0%	Energy Bandwidth Product	EBP	(1/Qes)*fs	
Minimum Impedance	Zmin	Ohms	3.9	7.5%	Moving Mass	Mms	g	0.4
Voice Coil Inductance	Le	mH	0.01		Suspension Compliance	Cms	um/N	130
Resonant Frequency	Fs	Hz	732.86	15%	Effective Cone diameter	D	cm	3.2
Mechanical Q Factor	Qms		4.41		Effective Piston Area	Sd	cm^2	8
Electrical Q Factor	Qes	1.12			Effective Volume	Vas	L	0.01
Total Q Factor	Qts		0.89		Motor Force Factor	BL	Tm	2.17
Ratio Fs/Qts	F	Fs/Qts	822.52		Motor Efficiency Factor	ß	(T*M^2)/Ohms	1.5
Half Space Sensitivity @2.83V	db@2.83V/1M	dB	91.26	+/- 1.0db	Voice coil former Material	VCfm		ASV
Half Space Sensitivity @1W/1M	db@1W/1M	dB	88.1	+/- 1.0db	Voice coil inner diameter	VCd	mm	25.76
Gap Height	Gh	mm	2		Rated Noise Power	P	W	80
Maximum Linear Excursion	Xmax	mm	0.1		Test Spectrum Bandwidth	2kHz - 20kHz		
Ferrofluid Type	FF				Driver Size	Inch	25 mm	
Driver Mass	Kg	0.1						

Frequency and Impedance Response

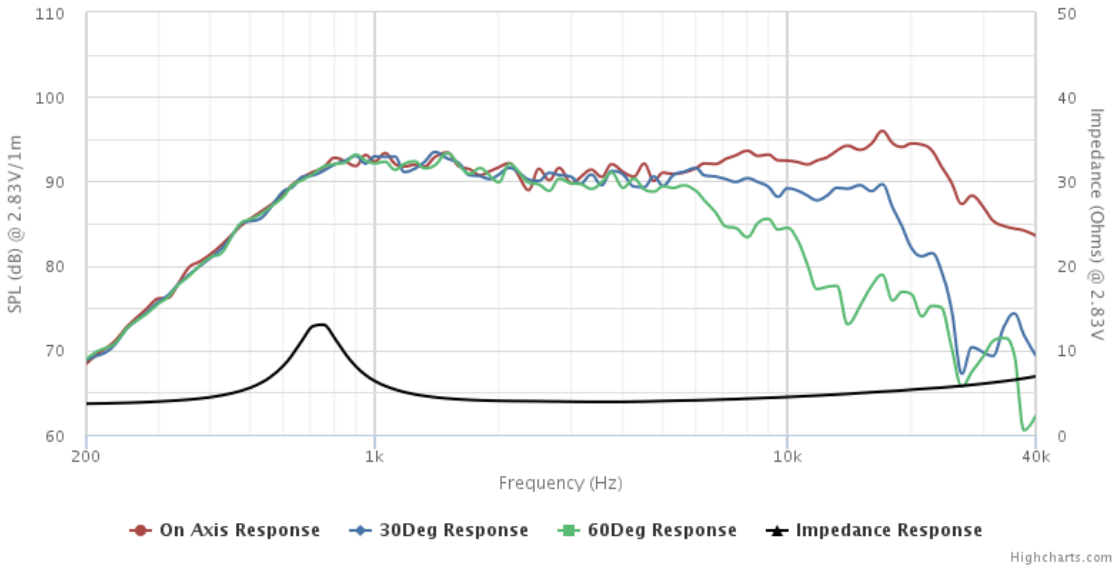

Tymphany HK LTD
Address : Room 1307-8 Dominion Centre, 43-59 Queens Rd East, Wanchai, Hong Kong
E-mail: sales@tymphany.com