SU SERIES W6-1936S

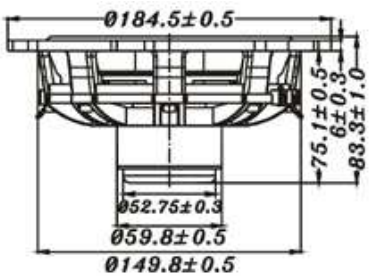

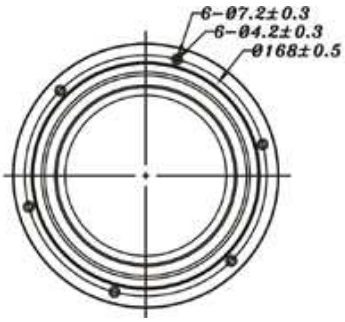

- **HIGH POWER HANDLING DESIGN**
- **FLAT ALUMINUM CONE, GOOD FOR HEAT RELEASE**
- **NEODYMIUM MAGNET DESIGN**
- **GF REINFORCED NYLON BASKET**
- **MAGNETICALLY SHIELDED**
- **GOOD FOR CAR, IN-WALL, SUBWOOFER APLICATION**

6.5" ALUM. SUBWOOFER

DIAPHRAGM MTL	Aluminum
SURROUND MTL	Rubber
NOMINAL IMPEDANCE	8 W
DCR IMPEDANCE	6.5 W
SENSITIVITY 1W/1m	78 dB
FREQUENCY RESPONSE	30 - 800K Hz
FREE AIR RESONANCE	30 Hz
VOICE COIL DIAMETER	38.5 mm
AIR GAP HEIGHT	7 mm
RATED POWER INPUT	80 W
MAXIMUM POWER INPUT	160 W
FORCE FACTOR, BL	21.56 TM
MAGNET WEIGHT (oz)	Neodymium
MOVING MASS	141.60 g
FERRO FLUID ENHANCED	No
SUSPENSION COMPL.	167.551 uMN^{-1}
EFFEC.PISTON AREA	0.014 M^2
Levc	0.548 mH
Zo	55 ohm
X-max	7.4 mm
Vas	4.66 Litr.
Qts	0.36
Qms	3.09
Qes	0.41

TB SPEAKERS
VOICE:886.2.26570282 FAX:886.2.26580166
E-MAIL :info@tb-speaker.com

CLOSE